INSTALLATION AND OPERATION INSTRUCTIONS FOR WALL-MOUNT

AND BUILT-IN UNITS

WM-FML-26-3223-STL
WM-FML-34-4023-STL
WM-FML-48-5523-STL
WM-FML-60-6623-STL
WM-FML-72-7823-STL
WM-FML-88-9623-STL

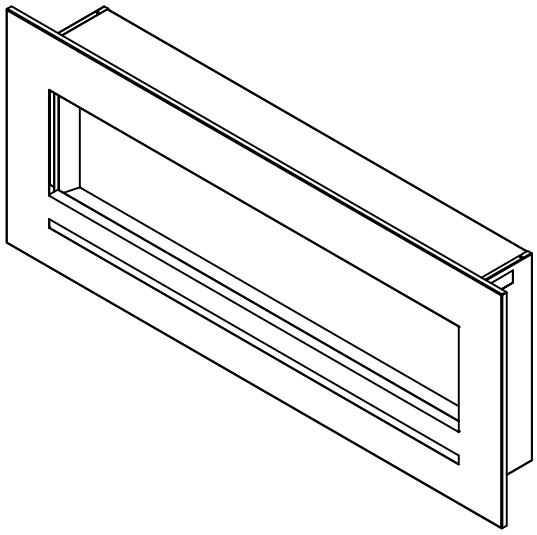

SAFETY INFORMATION

⚠ WARNING

If the information in these instructions are not followed exactly, a fire or explosion may result causing property damage, personal injury or loss of life.

Do not store or use gasoline or other flammable vapors and liquids in the vicinity of this or any other appliance.

INSTALLER: LEAVE THIS MANUAL WITH THE APPLIANCE.

CONSUMER: RETAIN THIS MANUAL FOR FUTURE REFERENCE.

TABLE OF CONTENTS

Please read and carefully follow all of the instruction found in this manual. Please pay special attention to the safety instructions provided in this manual. The instructions included here will assure that you have many years of dependable and enjoyable service from your Serria Flame product.

IMPORTANT INSTRUCTIONS....3
UNPACKING AND TESTING APPLIANCE....5
GROUNDING APPLIANCE....5
LOCATING THE FIREPLACE....5
WM-FML-26-3223-STL....6
WM-FML-34-4023-STL....7
WM-FML-48-5523-STL....8
WM-FML-60-6623-STL....9
WM-FML-72-7823-STL....10
WM-FML-88-9623-STL....11
REMOVING FRONT PANEL....12
INSTALLATION-WALL MOUNT....13
INSTALLATION- BUILT-IN....14
HARD- WIRE INSTALLATION....15
MEDIA OPTIONS....16
DECORATIVE MEDIA INSTALLATION....16
OPERATION....17
OPERATING WITH TOUCH PANEL....17
REMOTE CONTROL OPERATION....18
INSTALLING WALL THERMOSTAT....19
REPLACEMENT PARTS....20
EXPLODED VIEW....21
TRUBLE SHOOTING....22
SERVICE HISTORY....23
WARRANTY....24

IM PORTANT INSTRUCTIONS

1. Read all instructions before installing or using this heater.
2. Keep combustible materials, such as furniture, pillows, bedding, papers, clothes and curtains at least 3 feet from the front of the heater; keep them away from sides and rear as well.
3. Always unplug heater when it's not in use.
4. Do not operate the fireplace if it has a damaged cord or plug, after it has malfunctioned, or if the unit has been dropped or damaged in any way.
5. Never place the heater where it may fall into a bathtub or other water containers.
6. Do not run the cord under carpeting. Do not cover the cord with throw rugs, runners or anything else. Arrange the cord away from traffic areas where it could not be tripped over.
7. To disconnect the heater, turn the controls to "OFF" before removing the plug from the outlet.
8. Do not insert or allow foreign objects to enter any ventilation or exhaust opening, as this may cause an electric shock, fire or damage to the heater.
9. To prevent a possible fire, do not block air intakes in any manner.
10. A heater has hot and arcing or sparking parts inside. Do not use it in areas where gasoline, paint or flammable liquids are used or stored.
11. Use this heater only as described in this manual. Any other use not recommended by the manufacturer may cause fire, electric shock or injury to persons.
12. Avoid the use of an extension cord because the extension cord may overheat and cause a fire.
13. Always use properly grounded fused and polarized outlets.
14. Always use ground fault protection where it is required by electrical codes.
15. Always disconnect the power before performing any cleaning, maintenance or relocation of the heater.
16. To prevent a possible fire, do not burn wood or other materials in this heater.
17. To prevent electric shock or fire, always use a certified electrician, should new circuits or outlets be required.
18. When transporting or storing the heater, keep it in a dry place, free from excessive vibration.
19. This appliance should not be modified under any circumstances.
20. Packaging material should be kept away from children and be disposed of in a safe manner. Plastic bags are not toys and should be kept away from children and infants.
21. Do not use this heater in small rooms when they are occupied by persons not capable of leaving the room on their own, unless constant supervision is provided.
22. If the glass is damaged, do not use the heater in order to avoid a hazard.
23. Children of less than 3 years should be kept away from unless continuously supervised.
24. **CAUTION** Some parts of this product can become very hot and cause burns. Particular attention has to be given where children and vulnerable people are present.

Cautions

Do's	• Always install the heater in accordance with this guide. If in doubt obtain expert advice.
	• Always make sure the electrical socket is accessible and located adjacent to, but not above the heater.
	• Always disconnect the heater from the electrical supply before moving it, or carrying out cleaning, maintenance.
	• Always make sure the heater is firmly secured to prevent it from being tipped over.
	• Always use a fireguard when young children and infirm persons can come into contact with the heater.
Don'ts	• Never leave children unsupervised in a room where the heater is ON and unguarded.
	• Never obstruct or cover the fan outlet or force items into heater openings.
	• Never use aerosols or steam cleaners on or around the heater.
	• Never route the mains supply cable under carpet etc.
	• Never install the heater close to curtains or combustible materials.
	• Never use the heater to dry clothes etc.
	• Never sit or stand on the heater.
	• Never use with a timer or any other device that switches the fire on automatically.

UNPACKING AND TESTING APPLIANCE

Carefully remove the appliance from the box. Prior to installing the appliance, test to make sure the appliance operates properly by plugging the power supply cord into a conveniently located 120 Volt grounded outlet.

There are two screws on each side to fix the front panel.

Please see the figure right side.

TAKE OUT THIS SCREW ON EACH SIDE
before you take off the front panel.

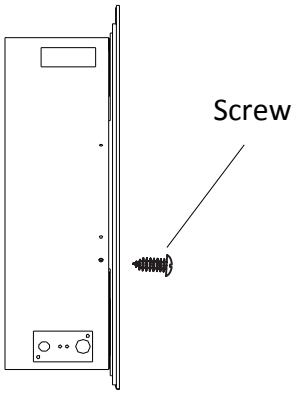

NOTE: There may be trace of odor during the first few minutes of initial use. This is harmless, normal and will never occur again.

GROUNDING APPLIANCE

This appliance is for use on 120 Volts. The cord has a plug as shown in (A). An adapter as shown in (C) is available for connecting three-blade grounding type plugs to two-slot receptacles. The green grounding lug extending from the adapter must be connected to a permanent ground such as a properly grounded outlet box. The adapter should not be used if a three-slot grounded receptacle is available.

To disconnect appliance, turn controls to off, then remove plug from outlet.

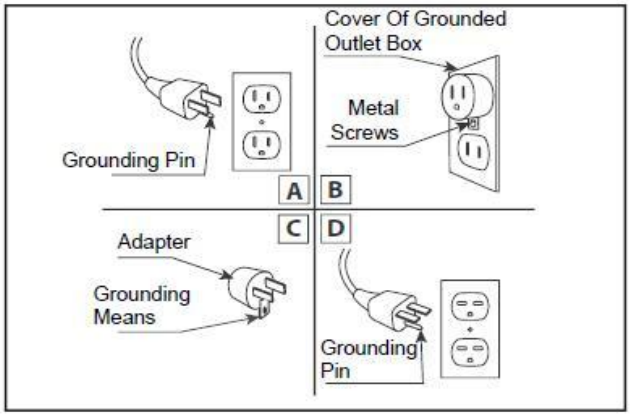

LOCATING THE FIREPLACE

Plan where to locate and frame the fireplace. This will save time and money later when you install the fireplace. Before installation consider the following:

1. Where the fireplace is located must allow for wall and ceiling clearances (see **INSTALLATION-WALL MOUNT**)
2. Consider a location where the fireplace screen will not be exposed to direct sunlight from windows or doors.
3. A 15 ampere, 120 Volt, 60 Hz branch circuit with proper ground must be available at the location. Preferably a dedicated branch circuit should be provided to avoid circuit breakers to trip or fuses to blow.

WM-FML-26-3223-STL

Description	Built-in or Wall Mount Appliance
Voltage	120V AC 60Hz
Watts	1500W Max
NO HEATER	25W
MOTOR HEATER	19W
Appliance Width	25 1/2" or 64.9 cm
Appliance Height	19 7/8" or 50.6 cm
Appliance Depth	6 1/8" or 15.5 cm
Gross Weight	52.8 lbs or 24 kg
Plug Location	Left side
Cord Length	70 7/8" or 180 cm
Rough Wall Opening Size	27"× 20 1/2" or 68.60 cm× 52 cm
BTU	4800

This appliance has been tested in accordance with the UL Standard 2021 for fixed and location dedicated electric room appliances in the United States and Canada. If you need assistance during installation, please contact your local dealer.

NOTE: This appliance must be electrically wired and grounded in accordance with local codes. In the absence of local codes, use the current CSA C22.1 Canadian Electrical Code in Canada or the ANSI/NFPA 70 National Electrical Code in the United States.

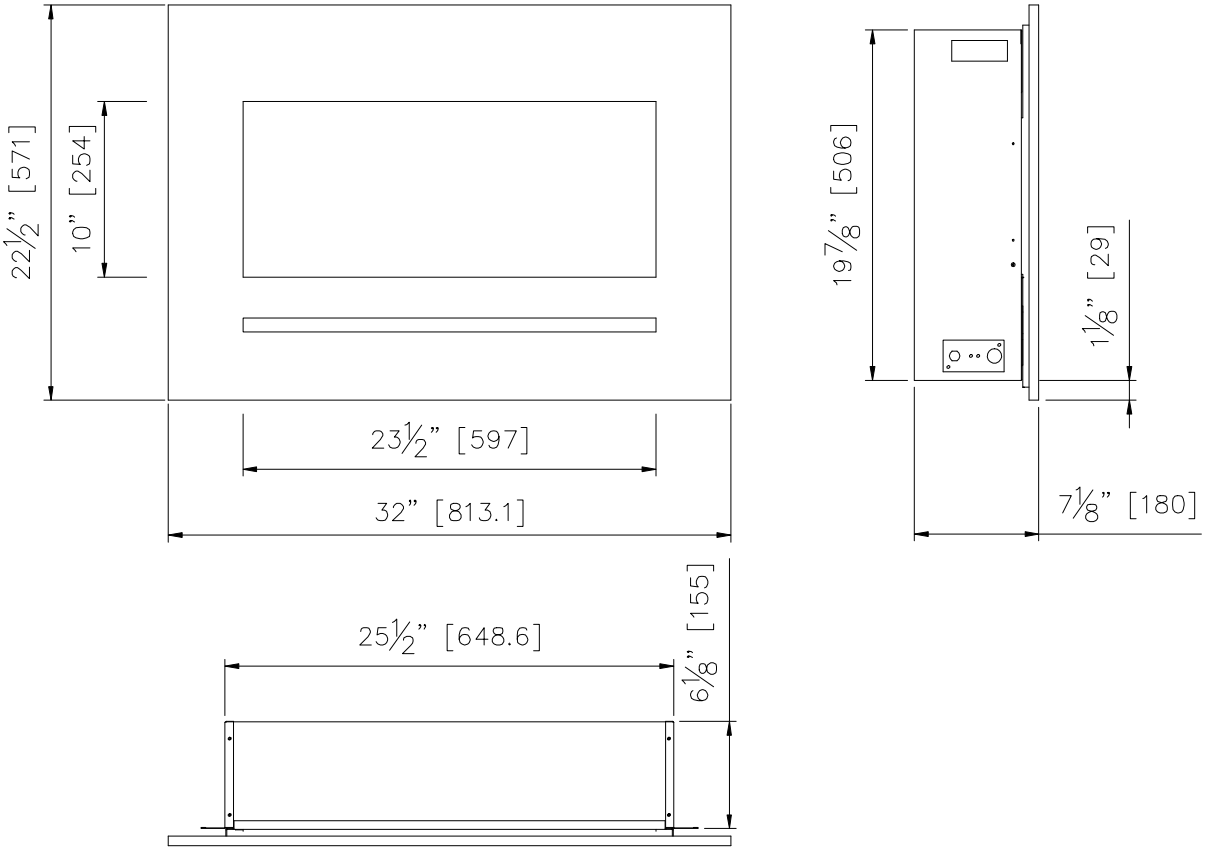

WM-FML-34-4023-STL

Description	Built-in or Wall Mount Appliance
Voltage	120V AC 60Hz
Watts	1500W Max
NO HEATER	25W
MOTOR HEATER	19W
Appliance Width	33 1/2" or 85.2 cm
Appliance Height	19 7/8" or 50.6 cm
Appliance Depth	6 1/8" or 15.5 cm
Gross Weight	63.1 lbs or 28.7 kg
Plug Location	Left side
Cord Length	70 7/8" or 180 cm
Rough Wall Opening Size	35"× 20 1/2" or 88.9 cm ×52 cm
BTU	4800

This appliance has been tested in accordance with the UL Standard 2021 for fixed and location dedicated electric room appliances in the United States and Canada. If you need assistance during installation, please contact your local dealer.

NOTE: This appliance must be electrically wired and grounded in accordance with local codes. In the absence of local codes, use the current CSA C22.1 Canadian Electrical Code in Canada or the ANSI/NFPA 70 National Electrical Code in the United States.

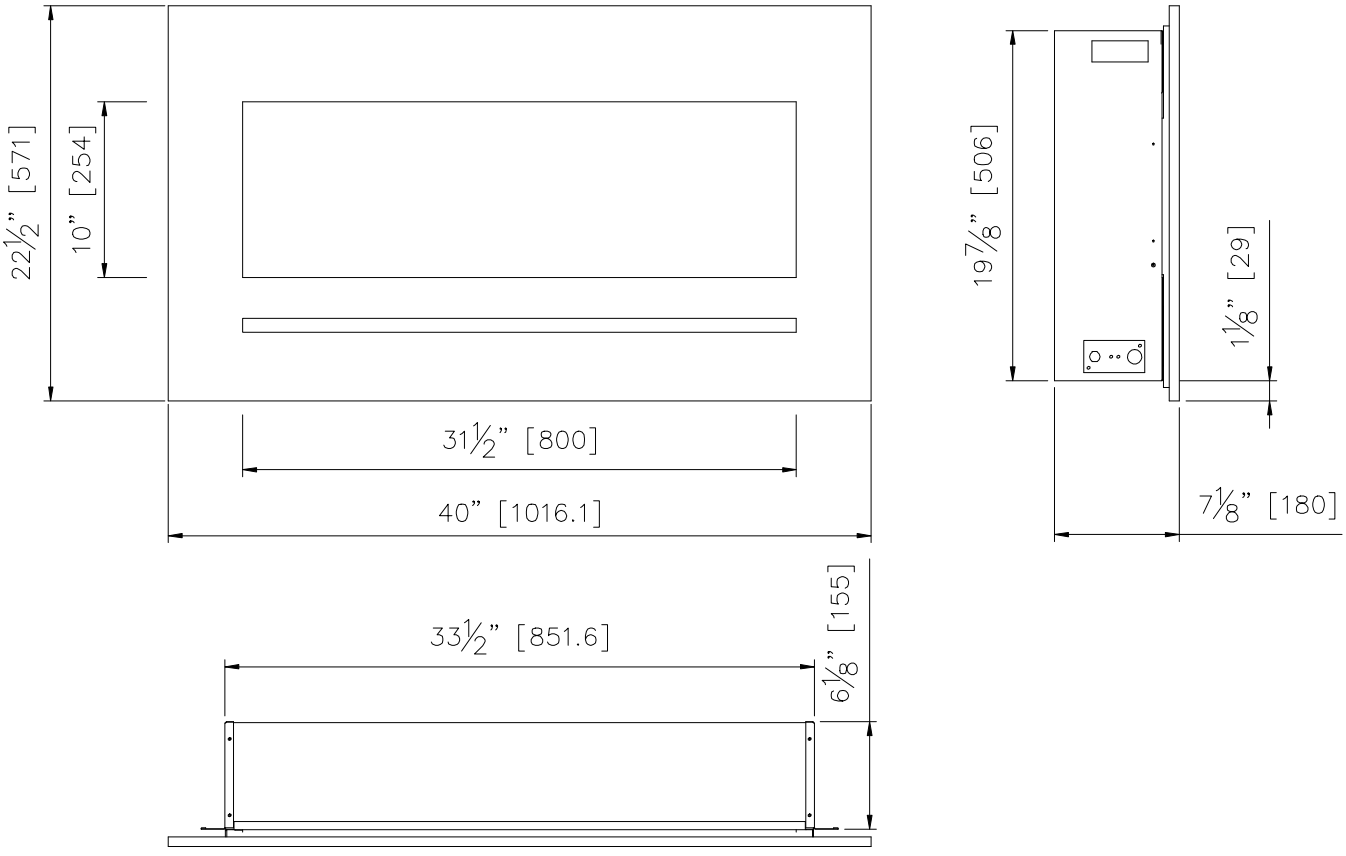

WM-FML-48-5523-STL

Description	Built-in or Wall Mount Appliance
Voltage	120V AC 60Hz
Watts	1500W Max
NO HEATER	25W
MOTOR HEATER	19W
Appliance Width	47 1/2" or 120.6 cm
Appliance Height	19 7/8" or 50.6 cm
Appliance Depth	6 1/8" or 15.5 cm
Gross Weight	81 lbs or 36.7 kg
Plug Location	Left side
Cord Length	70 7/8" or 180 cm
Rough Wall Opening Size	49"× 20 1/2" or 124.5 cm× 52 cm
BTU	4800

This appliance has been tested in accordance with the UL Standard 2021 for fixed and location dedicated electric room appliances in the United States and Canada. If you need assistance during installation, please contact your local dealer.

NOTE: This appliance must be electrically wired and grounded in accordance with local codes. In the absence of local codes, use the current CSA C22.1 Canadian Electrical Code in Canada or the ANSI/NFPA 70 National Electrical Code in the United States.

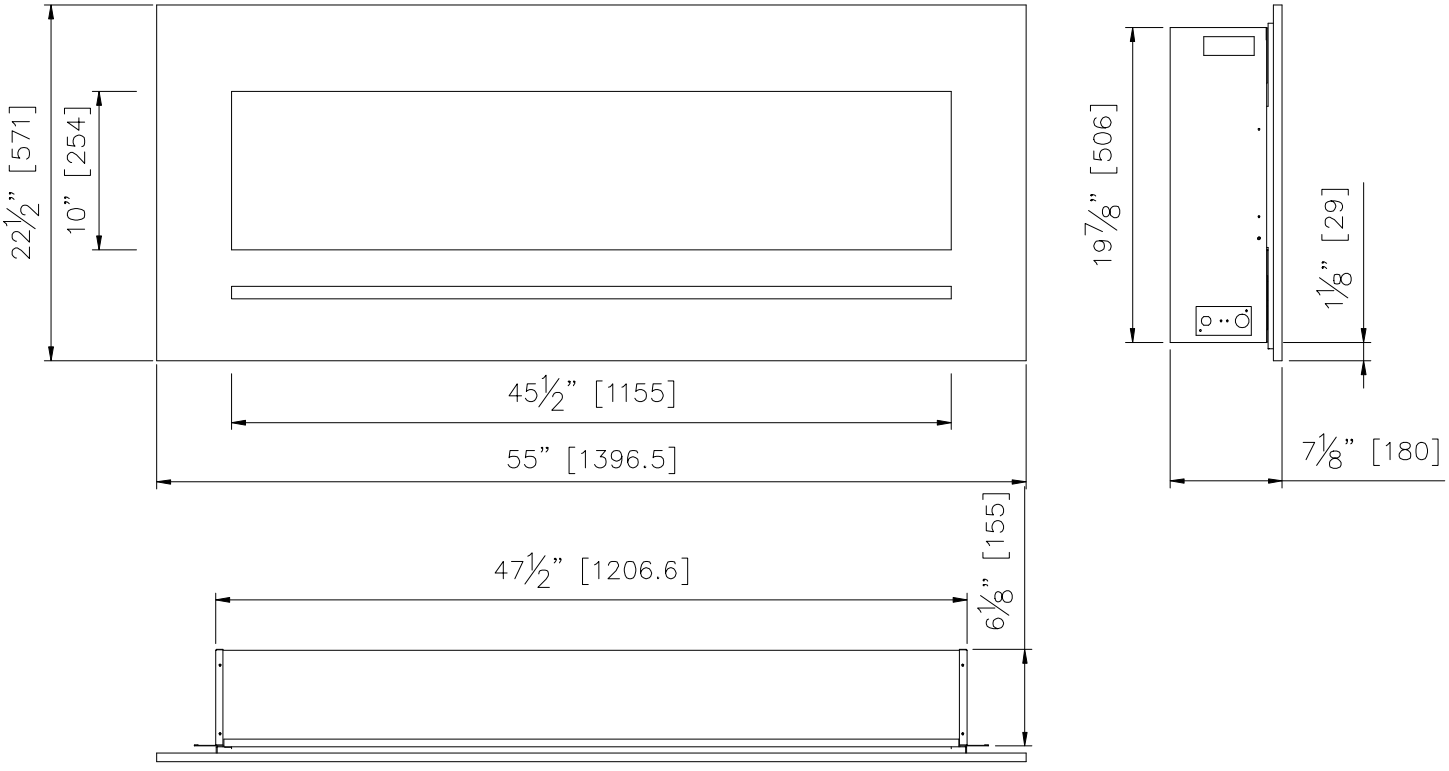

WM-FML-60-6623-STL

Description	Built-in or Wall Mount Appliance
Voltage	120V AC 60Hz
Watts	1500W Max
NO HEATER	25W
MOTOR HEATER	19W
Appliance Width	59 1/4" or 150.6 cm
Appliance Height	19 7/8" or 50.6 cm
Appliance Depth	6 1/8" or 15.5 cm
Gross Weight	97.2lbs or 44.2kg
Plug Location	Left side
Cord Length	70 7/8" or 180 cm
Rough Wall Opening Size	60 5/8" × 20 1/2" or 154 cm × 52cm
BTU	4800

This appliance has been tested in accordance with the UL Standard 2021 for fixed and location dedicated electric room appliances in the United States and Canada. If you need assistance during installation, please contact your local dealer.

NOTE: This appliance must be electrically wired and grounded in accordance with local codes. In the absence of local codes, use the current CSA C22.1 Canadian Electrical Code in Canada or the ANSI/NFPA 70 National Electrical Code in the United States.

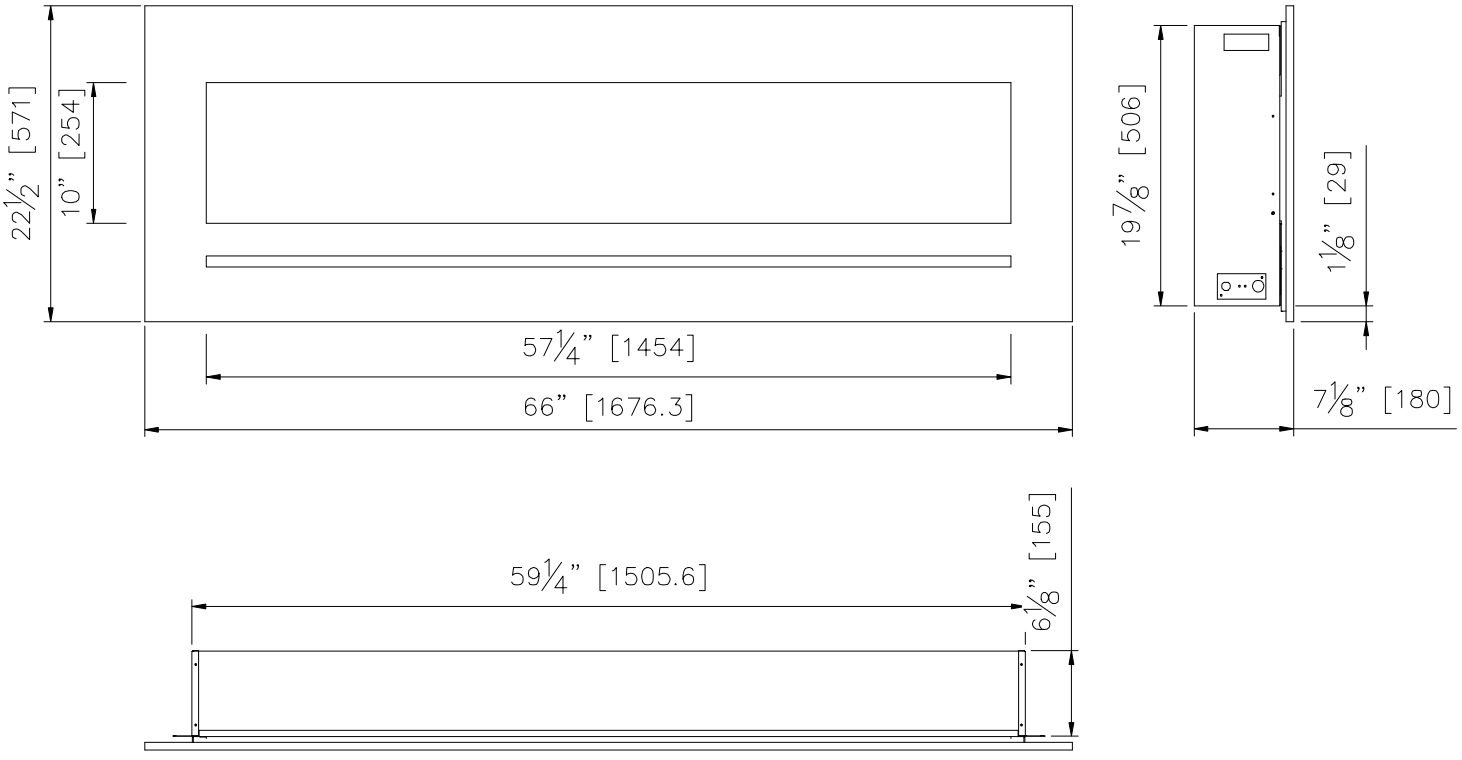

WM-FML-72-7823-STL

Description	Built-in or Wall Mount Appliance
Voltage	120V AC 60Hz
Watts	1500W Max
NO HEATER	25W
MOTOR HEATER	19W
Appliance Width	71" or 180.4 cm
Appliance Height	19 7/8" or 50.6 cm
Appliance Depth	6 1/8" or 15.5 cm
Gross Weight	113.3lbs or 51.5kg
Plug Location	Left side
Cord Length	70 7/8" or 180 cm
Rough Wall Opening Size	72 1/2"× 20 1/2" or 184 cm× 52 cm
BTU	4800

This appliance has been tested in accordance with the UL Standard 2021 for fixed and location dedicated electric room appliances in the United States and Canada. If you need assistance during installation, please contact your local dealer.

NOTE: This appliance must be electrically wired and grounded in accordance with local codes. In the absence of local codes, use the current CSA C22.1 Canadian Electrical Code in Canada or the ANSI/NFPA 70 National Electrical Code in the United States.

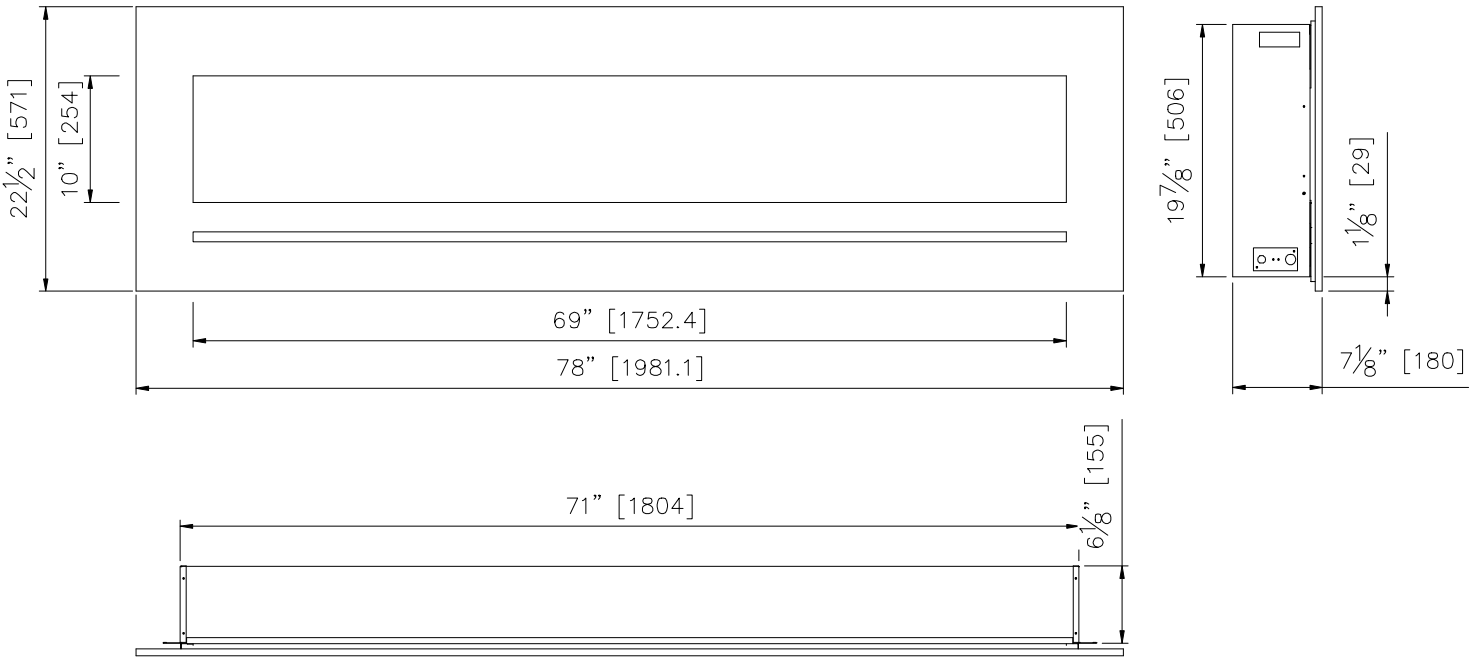

WM-FML-88-9623-STL

Description	Built-in or Wall Mount Appliance
Voltage	120V AC 60Hz
Watts	1500W Max
NO HEATER	25W
MOTOR HEATER	19W
Appliance Width	88" or 223.6 cm
Appliance Height	19 7/8" or 50.6 cm
Appliance Depth	6 1/8" or 15.5 cm
Gross Weight	138.6lbs or 63kg
Plug Location	Left side
Cord Length	70 7/8" or 180 cm
Rough Wall Opening Size	89 1/2"× 20 1/2" or 227.3 cm× 52 cm
BTU	4800

This appliance has been tested in accordance with the UL Standard 2021 for fixed and location dedicated electric room appliances in the United States and Canada. If you need assistance during installation, please contact your local dealer.

NOTE: This appliance must be electrically wired and grounded in accordance with local codes. In the absence of local codes, use the current CSA C22.1 Canadian Electrical Code in Canada or the ANSI/NFPA 70 National Electrical Code in the United States.

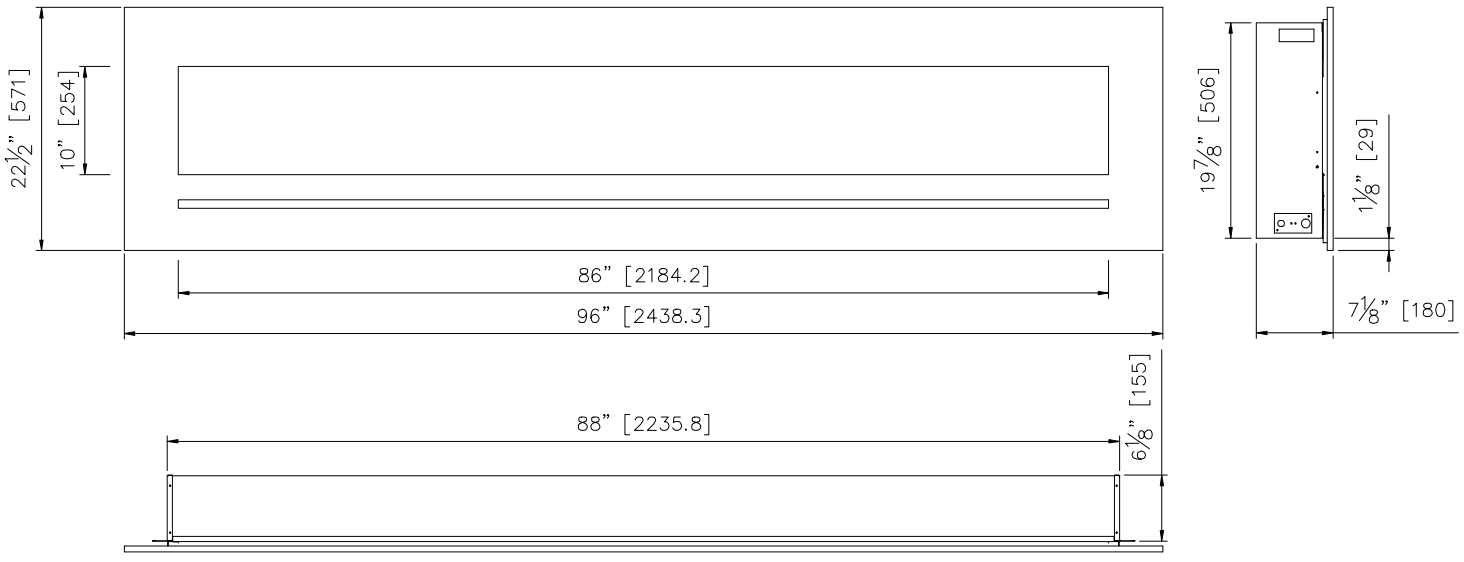

REMOVING FRONT PANEL

Models WM-FML-26-3223-STL, WM-FML-34-4023-STL, WM-FML-48-5523-STL, WM--FML-60-6623-STL each have 2 screws that secure the front panel in place. Models WM-FML--72-7823-STL and WM-FML-88-9623-STL have four screws that secure the front panel in place.

Two people are required for the installation process.

1. The back-lighting LED is located on the back of the front panel. Before removing the front panel you must unplug the back-lighting from the unit. This plug is located at the bottom left hand side behind the front panel.

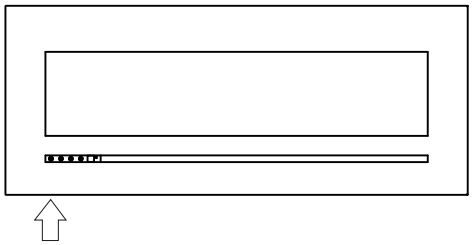

Location of the back-lighting plug

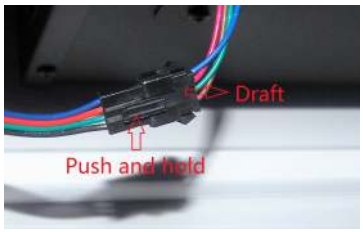

Unplug the back-lighting

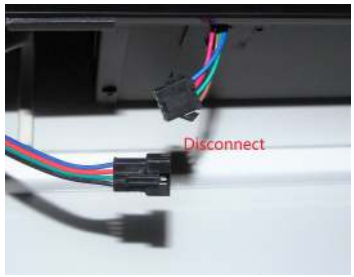

2. The screws are located on the sides of the unit. Once located, unscrew the two or four screws. You can then lift the front panel from the 4 shoulder posts on the sides of the unit and remove the front panel.

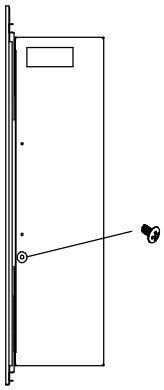

Screw locations on uint

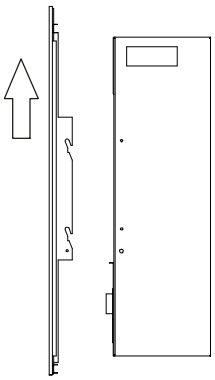

Lift the front panel from shoulder posts.

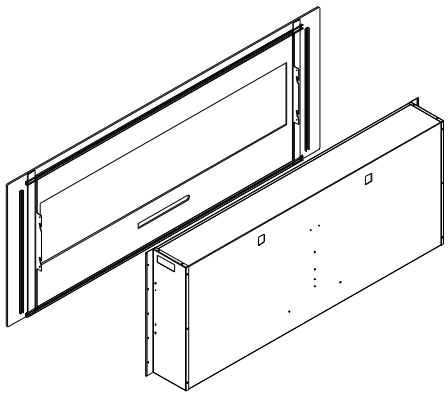

3. To replace the front panel, lift onto the 4 shoulder posts. For a Wall Mount installation replace the two or four screws to secure the glass. For Flush Mount installs it is not possible to replace the screws.

INSTALLATION-WALL MOUNT

NOTE: Due to the many different materials used on different walls, it is highly recommended that you consult your local builder before you install this appliance.

1. Select a location that is not prone to moisture and is located at least 0.91 m or 3 feet away from combustible materials such as curtains or drapes, furniture, bedding, paper, etc.

2. Referring to Fig. 1 below select a suitable position in which to mount the heater horizontally – use a spirit level to achieve this.

3. Check the wall to ensure there is no wiring, pipe wires etc in the area to be drilled. Drill 8 or more holes (8mm diameter & 40mm depth) using a suitable size drill and put the wall plugs into the holes.

4. Remove mounting plate from the back of the appliance by removing the two scews as shown in Fig. 2.

5. Referring to Fig. 3, secure the mounting plate to the wall.

6. Secure the fireplace to the wall using a screw. Fig. 4.

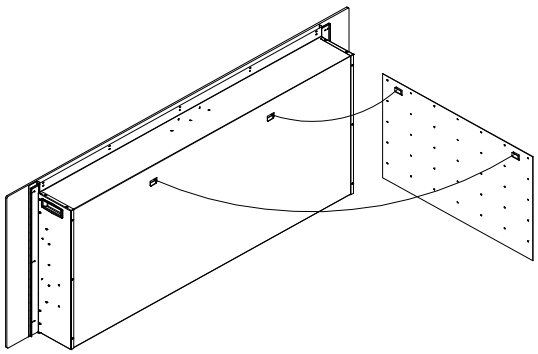

Fig. 2

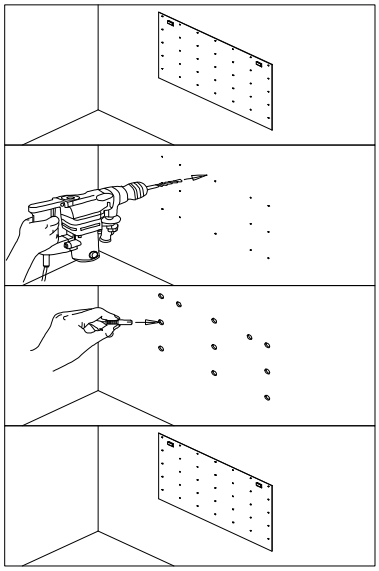

Fig.3

Warning!

Be sure that the bolts have been fixed firmly enough to withstand the weight !

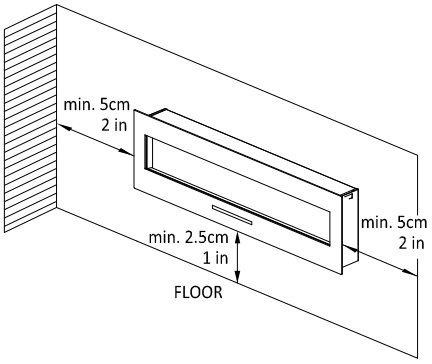

Fig. 1

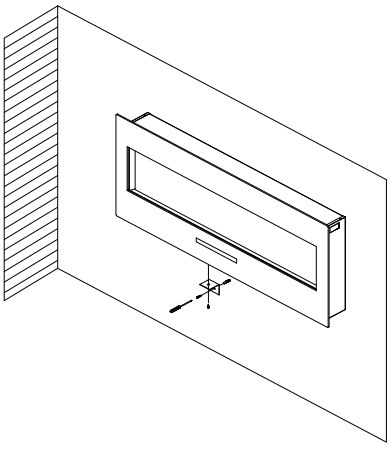

Fig. 4

INSTALLATION- BUILT-IN

NOTE: Due to the many different materials used on different walls, it is highly recommended that you consult your local builder before you install this appliance.

1. Select a location that is not prone to moisture and is located at least 0.91m or 3 feet away from combustible materials such as curtains or drapes, furniture, bedding, paper, etc.
2. Mark the desired location on the floor and store appliance in a safe, dry and dust free location.
3. Prepare a wall with a framed opening to accommodate the size of your unit. Leave at least 1/4" (6 mm) around the edge of the appliance. Any new wiring must be done in compliance with local and national codes and other applicable regulations.

Note: Fireplace must stick out of the wall a minimum of 1/2" or 1.5 cm.

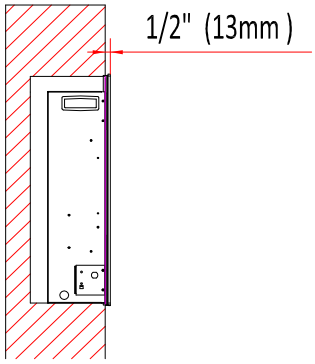

Prior to installing the appliance, test to make sure the appliance operates properly by plugging the power supply cord into a conveniently located 120 Volt grounded outlet.

The rough wall opening size of the fireplace:

	W(")	D(")	H(")
WM-FML-26-3223-STL	27	6 1/2	20 1/2
WM-FML-34-4023-STL	35	6 1/2	20 1/2
WM-FML-48-5523-STL	49	6 1/2	20 1/2
WM-FML-60-6623-STL	60 5/8	6 1/2	20 1/2
WM-FML-72-7823-STL	72 1/2	6 1/2	20 1/2
WM-FML-88-9623-STL	89 1/2	6 1/2	20 1/2

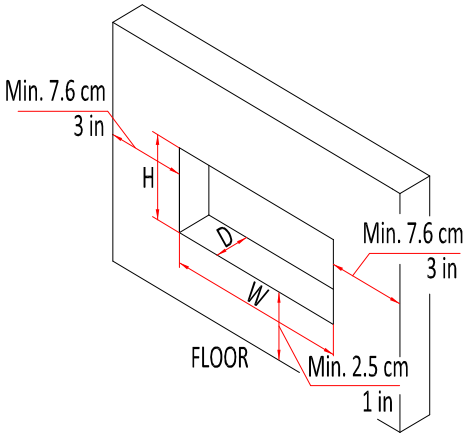

1. Take the front panel off from the unit. Put the brackets on the both sides and top of the fireplace as shown blew.

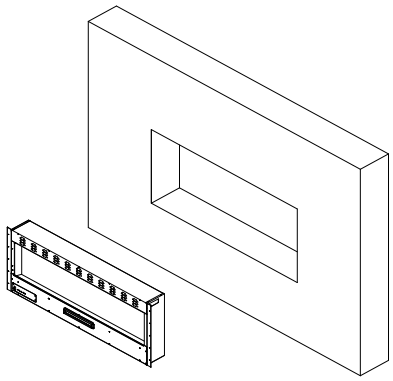

2. Lift fireplace and insert into opening.
3. Make sure that the power supply port is not behind the wall.
4. Level the fireplace.
5. Drive mounting screws into the mounting brackets on the unit and the wall studs.

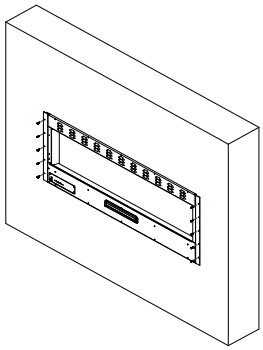

6. Replace the front panel and plug in back--lighting LED. See page 11.

HARD- WIRE INSTALLATION

Turn off the appliance completely and let cool before servicing. Only a qualified service person should service and repair this electric appliance.

If it is necessary to hard wire this appliance, a qualified electrician must remove the cord connection, and wire the appliance directly to the household wiring.

This appliance must be electrically connected and grounded in accordance with local codes, if hard wired. In the absence of local codes, use the current CSA C22.1 CANADIAN ELECTRICAL CODE in Canada or the current ANSI/NFPA 70 NATIONAL ELECTRICAL CODE in the United States.

1. Remove the cover plate from the left side of the appliance by removing the two screws, as shown below. Unscrew and remove power cord.

2. Attach the wiring to the junction block. Please make sure the live wire goes into the “L”, the neutral wire into “N” and the ground wire into “G”.

3. Put the plate back and screw back.

MEDIA OPTIONS

The only media that comes with this version is 'Clear decorative media'. Consumers may purchase optional decorative media if they choose. See dealer for more details.

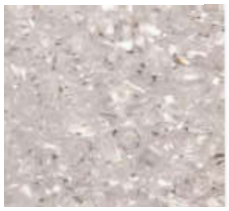

Clear

DECORATIVE MEDIA INSTALLATION

NOTE:Please unplug the power cord before you install the decorative media.

Removing the front panel

Remove the screws from both sides of the unit to take off the surround. It is recommended that two people lift the surround away from the unit.

Installing the decorative media

Pour the fire glass media into the tray. Feel free to use any combination of fire glass media that you find most appealing. Put back the front panel after you finish installing the decorative media.

Operating with Touch Panel

The unit can be controlled by either the touch panel controls which are located on the left side of the front panel or the remote control.

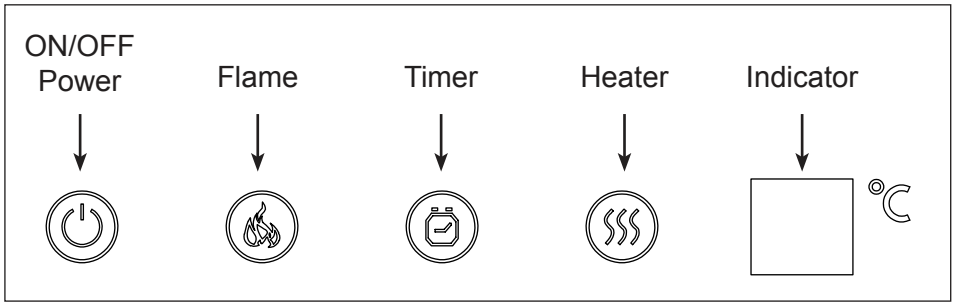

1. Press " ⏻ " to turn on and off the appliance.
2. Press " 🔥 " multiple times to adjust between mid, low, on/off, or high brightness options
3. Press " ⏲ " multiple times to set operating duration to 30 min, 1h, 2h, 3h, 4h, 5h, 6h, 7h, 8h, or off.
4. Press " ♨ " multiple times to set ambient temperatures at 18℃(64.4℉), 19℃(66.2℉), 20℃(68℉), 21℃(69.8℉), 22℃(71.6℉), 23℃(73.4℉), 24℃(75.2℉), 25℃(77℉), 26℃(78.8℉), 27℃(80.6℉), 28℃(82.4℉), ON or OFF. When setting the temperature, the number will flash.

Note: The touch panel buttons will glow when pressed. The light fades in 5 seconds after pressing.

⚠ **NOTE:Please unplug the power cord if you will not use the fireplace for a long time.**

REMOTE CONTROL OPERATION

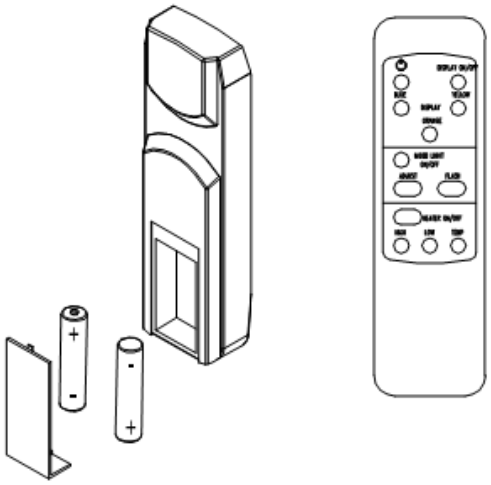

For remote to function make sure the heater is plugged in and main power switch located on the bottom left hand side is at position I.
When operating the remote make sure you point the remote to the centre of the fireplace and make sure each time you press the button the buzzer inside the unit will beep once. It takes some time for the receiver to respond to the transmitter. Do not PRESS the buttons more than once within two seconds for correct operation.

Power on ⏻ button: The power-on button at top left corner of the remote is the main ON/OFF power button. This will turn off all the functions and the fireplace will be in standby mode.

DISPLAY ON/OFF button: Switching the fireplace flame and tray light ON/OFF. It has functions of setting memory.

DISPLAY BLUE button: Adjust the blue color brightness of flame and tray.

DISPLAY YELLOW button: Adjust the yellow color brightness of flame and tray.

DISPLAY ORANGE button: Adjust the orange color brightness of flame and tray.

MOOD LIGHT ON/OFF button: Switching the mood light ON/OFF.

ADJUST button: Switching the color of the mood light.

FLASH button: Switches the mood light into flash mode, this cycles through all mood light colors.

HEATER ON/OFF button: Switching the heater ON/OFF. It has functions of setting memory.

HIGHT button: Press the high button to switch the heater to high heat setting 1500W.

LOW button: Press the low button to switch the heater to low heat setting 750W.

TEMP. button: Press the TEMP. button multiple times to set ambient temperature at 18℃(64.4℉), 19℃(66.2℉), 20℃(68℉), 21℃(69.8℉), 22℃(71.6℉), 23℃(73.4℉), 24℃(75.2℉), 25℃(77℉), 26℃(78.8℉), 27℃(80.6℉), 28℃(82.4℉). When setting the temperature, the number will flash.

INSTALLING WALL THERMOSTAT

WALL THERMOSTAT WIRING DIAGRAMS

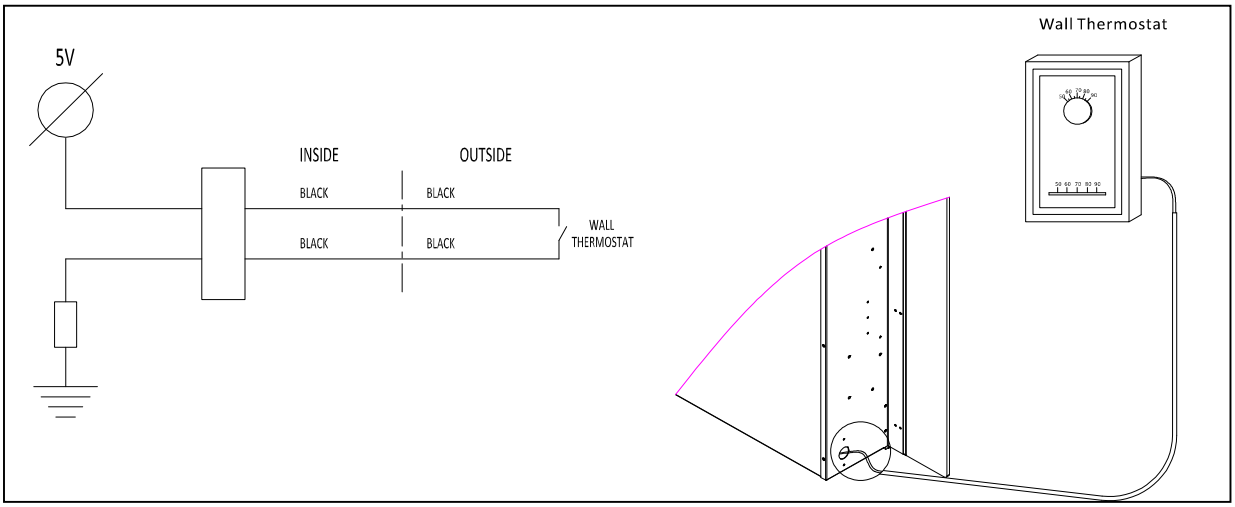

NOTE: THE WALL THERMOSTAT WILL WOKE WHEN THE HEATER ON TEMP. SETTING. PLEASE REFER TO THE MANUAL CONTROL AND THE REMOTE CONTROL.

Wire the wall thermostat prior to installing the fireplace.

WALL THERMOSTAT WIRING(24 VAC)

Install Wall Thermostat per instructions provided with kit and per the following information:

1. Turn off circuit breaker.
2. Remove cover plate located on the left side of appliance.
3. Pull the wire out and cut the inside thermostat. Connect the wires to the wall thermostat as shown below. Follow instructions provided with wall switch kit.

REPLACEMENT PARTS

NO	PART NUMBER						DESCRIPTION	QTY.
	WM-FML-26-3223-STL	WM-FML-34-4023-STL	WM-FML-48-5523-STL	WM-FML-60-6623-STL	WM-FML-72-7823-STL	WM-FML-88-9623-STL		
1							FIREPLACE BOX	1
2	301506						REMOTE RECEIVER	1
3	601095D						CIRCUIT BOARD	1
4	601300C						TOUCH PANEL	1
5							TOP PANEL	1
6	602082						BLOWER AND HEATER ASSEMBLY	1
7	3117003	3118003	3119003	3120003	3121003	3122003	BACK BLACK PLASTIC BOARD	1
8	3117505						BLOWER MOUNT	1
9							GLASS BRACKET	2
10							LED BRACKET	1
11	10702143	10702144	10702145	10702164	10702146	10702165	BOTTOM GLASS	1
12	10101225						FLAME MOTOR	1
13	3093502	3094502	3095502	3120502	3096502	3122502	FLICKER ASSEMBLY	1
14	10103007						POWER CORD	1
15							BOTTOM PANEL	1
16	601136B	601136B+601137B	601136B	601136B+601137B	601137B	601136B+601137B	FLAME LED STRIP	1
17	601136B	601137B	601136B	601136B+601137B	601137B	601136B+601137B	TRAY LED STRIP	
18	3127501	3128501	3129501	3130501	3131501	3132501	FRONT PANEL	
19	10105063						REMOTE	

EXPLODED VIEW

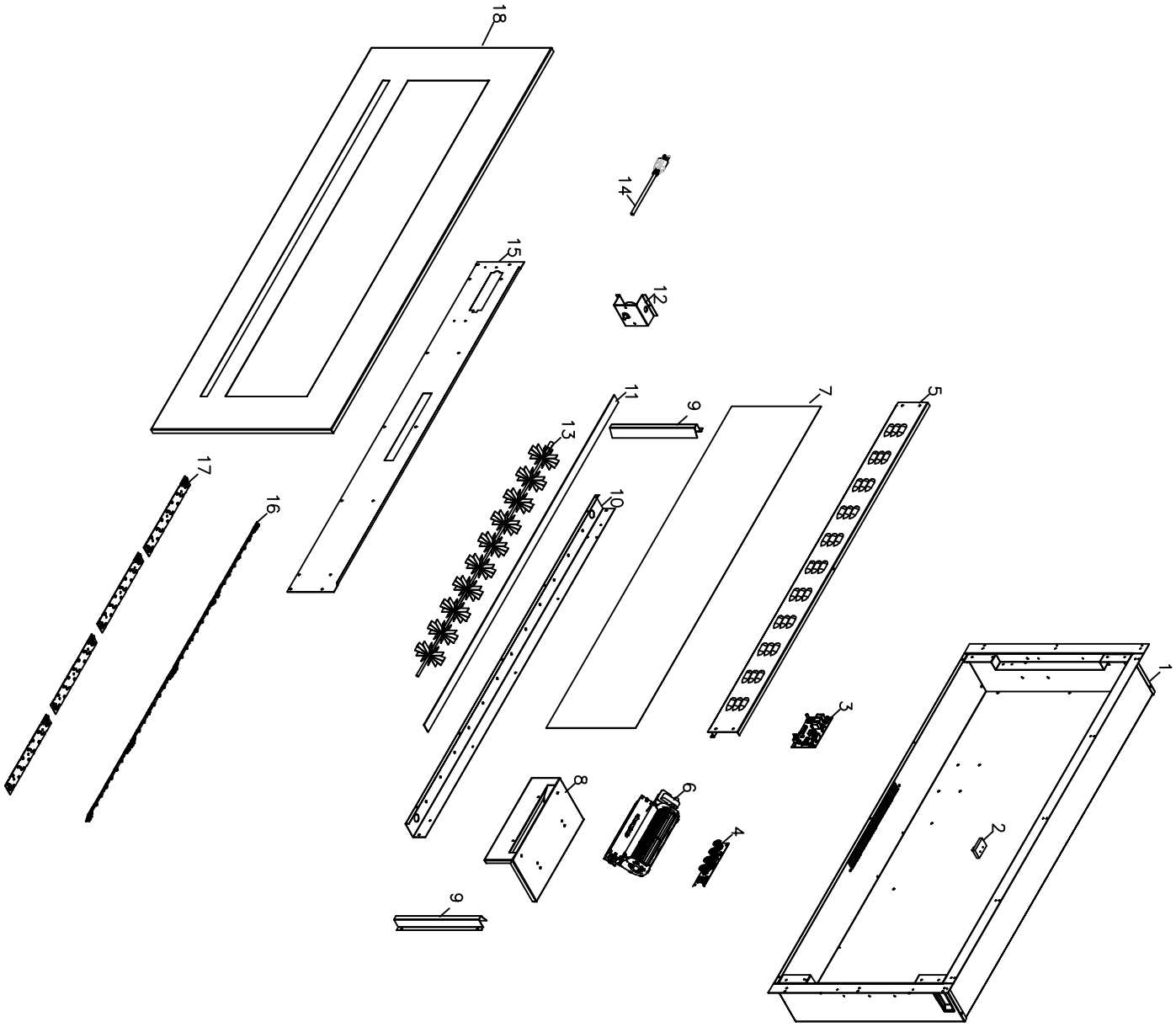

TRUBLE SHOOTING

PROBLEM	POSSIBLE CAUSE	SOLUTION
Dim or no flame	Flame LED's are burnt out	Inspect the LED's and replace them if necessary.
Ember bed is not glowing or dimming	Ember LED's are burnt out	Inspect the ember bed LED's and replace them if necessary.
Appliance turns off and will not turn on	Appliance has overheated and safety device has caused the thermal switch to disconnect	Turn off the main switch, allow appliance to cool for 10 minutes, then turn it on.
	House circuit breaker has tripped	Reset house circuit breaker.
	Appliance's fuse has blown	Replace the fuse.
Appliance will not come on when switch is flipped to ON	Appliance is not plugged into an electrical outlet	Check plug and plug in.
	Appliance has overheated and safety device has caused the thermal switch to disconnect	Turn off the main switch, allow appliance to cool for 10 minutes, then turn it on.
	Circuit board is burnt out	Inspect the circuit board and replace it if necessary.
No warm air coming out of appliance	Heater is burnt out	Inspect the burner and heater assembly and replace it if necessary.
Flame sputters	Flame motor is defective.	Call a qualified service technician and replace flame motor.
Remote Control does not work.	Low batteries. Unit switch in "O" position.	Replace AAA batteries in remote control. Turn the switch in "I" position.
Flame is fixed.	Wiring may be loose or the flame motor may be defective.	

SERVICE HISTORY

This heater must be serviced annually depending on usage.

Date	Dealer Name	Service technician Name	Service Performed	Special Concerns

NOTES:

Sierra Flame warrants that your newly purchased Sierra Flame electric fireplace is free from manufacturing and material defects for a period of two (2) years from the date of the first purchase, subject to the conditions and limitations contained below.

Warranty Application & Exclusions
This limited warranty applies to your newly purchased Sierra Flame electric fireplace; the limited warranty's application is limited to purchases made in any province of Canada or in any of the 52 States of the United States of America, including the District of Columbia. Only the original purchaser of the product is eligible for coverage under this limited warranty; the warranty is not transferable.

Products excluded from this limited warranty
Light bulbs are not covered by this limited warranty and are the sole responsibility of the owner/purchaser. Sierra Flame does not cover service or labor charges.

Warranty Coverage and Term
Products covered by this limited warranty have been tested and inspected prior to shipment and, subject to the provisions of this warranty, Sierra Flame warrants such products to be free from defects in material and workmanship for a period of two (2) years from the date of the first purchase of such products.

The limited two (2) year warranty period for products also applies to any implied warranties that may exist under applicable law. Some jurisdictions do not allow limitations on how long an implied warranty lasts, so the above limitation may not apply to the purchaser.

All other warranties—expressed or implied—with respect to the product, its components and accessories or any obligation/liabilities on the part of Sierra Flame are hereby expressly excluded.

Limitations to Coverage Under Limited Warranty
This limited warranty does not apply to products that have been repaired, except by Sierra Flame or its authorized service representatives, or otherwise altered. This limited warranty further does not apply to defects resulting from misuse, abuse, accident, neglect, incorrect installation, improper maintenance or handling, or operation with an incorrect power source. Products made by other manufacturers, sold with the product or thereafter, are not covered by this limited warranty. The use of unauthorized components will render this warranty null and void.

Vista Outdoor Units
All Vista units that are installed outdoors or in moisture intense conditions must use the stainless steel cover. Proof of purchase of the cover is required for any warranty claims.

Defects
Defects must be brought to the attention of the selling dealer. Please have your proof of purchase, catalogue/model and serial numbers available when contacting dealer; any and all service under the limited warranty requires a proof of purchase of the product. Should a product or part covered by this limited warranty be proven to be defective, in material or workmanship, and during the two (2) year limited warranty period, Sierra Flame will replace such defective product or part without charge. If Sierra Flame is unable to replace such product, or if replacement is not commercially practicable or cannot be timely done, in its sole discretion Sierra Flame may, in lieu of replacement, choose to refund the purchase price for such product or part. Sierra Flame does not cover labor or service charges to replace said parts.

Limitations
In no event will Sierra Flame, including without limitation any of its directors, officers, shareholders, employees, consultants, agents, heirs, executors, administrators and assigns, be liable to the purchaser or any third party, whether in contract, in tort, or on any other basis for any indirect, special, punitive, exemplary, consequential, or incidental loss, cost or damage arising out of or in connection with the sale, maintenance, use or inability to use the product, even if Sierra Flame, including without limitation any of its directors, officers, shareholders, employees, consultants, agents, heirs, executors, administrators and assigns, have been advised of the possibility of such losses, costs or damages, or if such losses, costs or damages are foreseeable. In no event will Sierra Flame, including without limitation any of its directors, officers, shareholders, employees, consultants, agents, heirs, executors, administrators and assigns, be liable for any direct losses, costs or damages that exceed the purchase price of the product.

Some jurisdictions do not allow the exclusion or limitation of incidental or consequential damages, so the above limitation or exclusion may not apply to the purchaser.

Application of Provincial and State Law
This limited warranty gives you specific legal rights, and you may also have other rights which vary from jurisdiction to jurisdiction. The provisions of the United Nations Convention on Contracts for the Sale of Goods shall not apply to this limited warranty or the sale of products covered by this limited warranty.

General
Sierra Flame reserves the right to make changes at any time without notice, in design, material, specifications, prices and the right to discontinue styles and products.